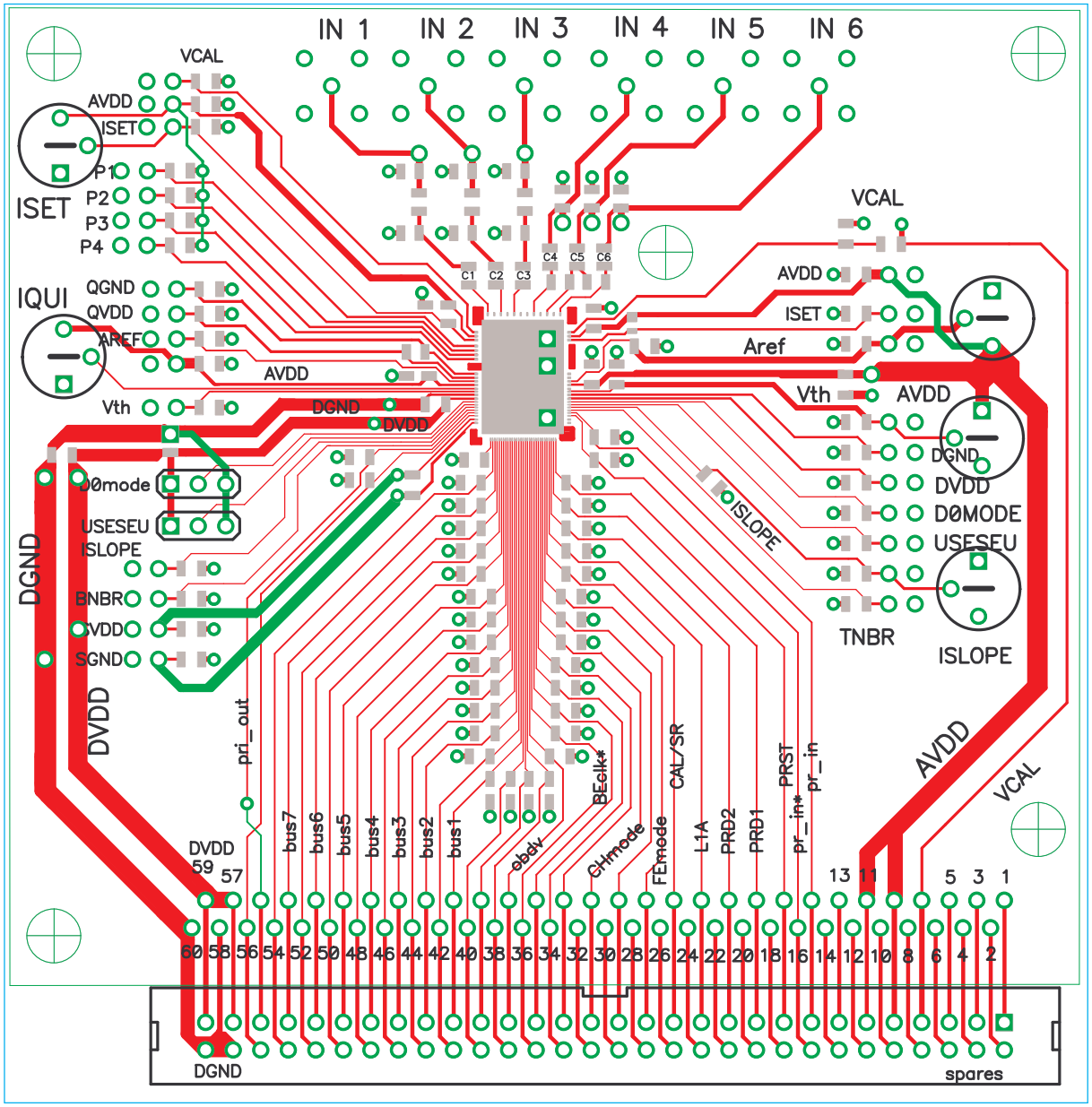
IN 1
IN 2
IN 3
IN 4
IN 5
IN 6
VCAL
AVDD
ISET
P1
P2
P3
P4
ISET
QGND
QVDD
AREF
IQUI
AVDD
Vth
DGND
DVDD
D0mode
USESEU
ISLOPE
BNBR
SVDD
SGND
DGND
DVDD
pri_out
C1
C2
C3
C4
C5
C6
VCAL
AVDD
ISET
Aref
Vth
AVDD
DGND
DVDD
D0MODE
USESEU
TNBR
ISLOPE
ISLOPE
AVDD
VCAL
DVDD
59
57
bus7
bus6
bus5
bus4
bus3
bus2
bus1
ebdv
CHmode
BEclk*
FEmode
CAL/SR
L1A
PRD2
PRD1
PRST
pr_in*
pr_in
13
11
5
3
1
60
58
56
54
52
50
48
46
44
42
40
38
36
34
32
30
28
26
24
22
20
18
16
14
12
10
8
6
4
2
DGND
spares