Fitting the Pulsar in the SVT crates

Alex, Stefano, Ted & co.

Connectors

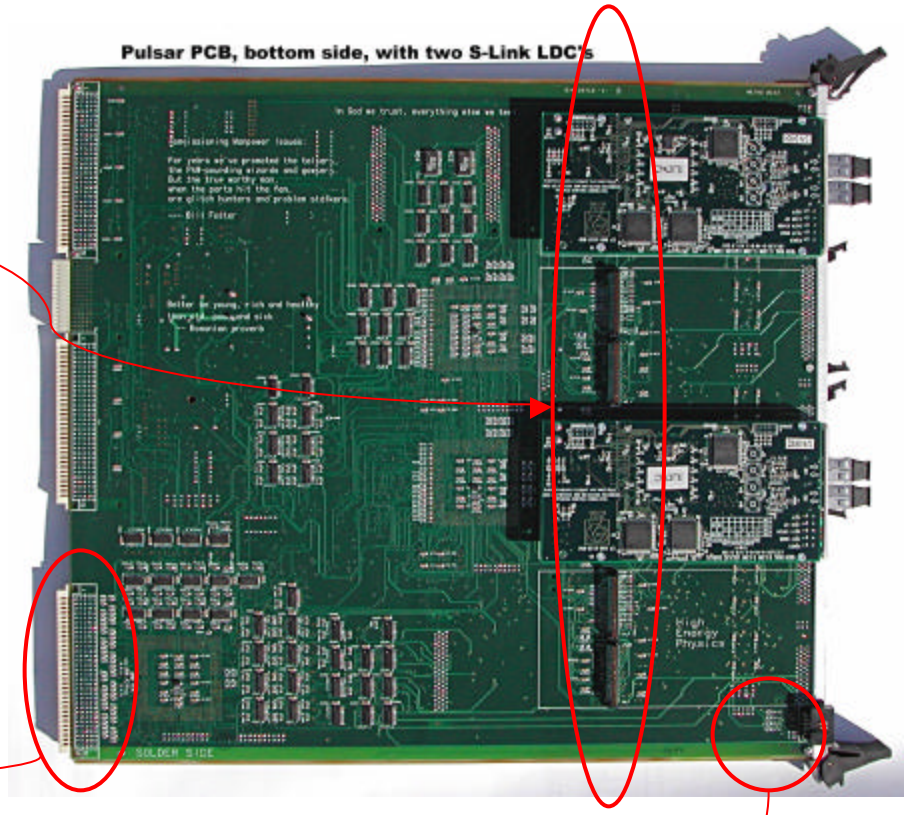

- Bottom side mezzanine:
  - Single slot operation is dangerous if these connectors are mounted
  - Required for full test
    - If not mounted traces to/from connectors will not be tested
    - Lines eventually needed for AMS+HB+RW implementation
  - Stuffing them later on is
    - difficult
    - error prone
    - Leaves room for manufacturer's mistakes
  - Decision to be taken NOW
- P3 connector
  - Incompatible with AMB slots (needs rewiring of 5 lines)
  - Could fit any "feedthrough" slot (HF, TF, HB etc.)
  - Mounting+kludging would:
    - "freeze" the design
    - make the board incompatible with fully stuffed spares
  - Mounting the connector afterwards is easy "at home", even with possible PCB for kludges
- FPGA programming:
  - sits at the very bottom, bottom side
  - interferes with SVT-style front connectors (top side)
  - Could mount on component side and wire to the top part of the front panel, where the TS connector would sit
  - PULSAR potentially programmable through VME (never tested though!)

Move TF/RW all together

- Pros:
  - 1 cable/wedge
  - RW is “almost” in its long term destination
  - Access to a RW board requires unplugging only one other board in the system (its neighbouring HB)
- Cons:
  - B0svt06 startup could get real slow (when we update the TF constants)
  - There are 6 crates where we have to have special precautions in handling boards, instead of 1

Slots/Crates

- Hot swapping not possible→power cycle crates whenever removing RW
- Replace TF:
  - "Single slot" RW needed
    - Mezzanine connectors:
      - Do not stuff
      - Stuff and tie insertion to GB (previous board)
    - P3: no issue
    - Programming
      - Insertion problems would suggest to either
        - » Have connector in the front panel
        - » Test and use VME programmability
  - Cabling simplified
  - Closer to asymptotic configuration
- All RW in one slot
  - Need twice as much cable
  - Swapping will require:
    - Power cycling
    - Simultaneous extraction of all the boards (ouch!)
  - Can do whatever you want for P3/mezzanine/programming connectors

Options

- “Ultra conservative”:
  - Fully stuff RW mezzanine connectors
  - Fully test them
  - Pack all RW together (07⊕06)
  - Preserve the current SVT configuration as much as possible
- “Cleanest”:
  - Fully stuff/test RW mezzanine connectors
  - Fix RW to crate with screws and big caution labels
  - Make sure ALL experts know how to properly handle RW insertion/removal
- “Intermediate”:
  - Do not mount RW mezzanine connectors
  - Use TF slots

Boards layout as of now

wedge crate

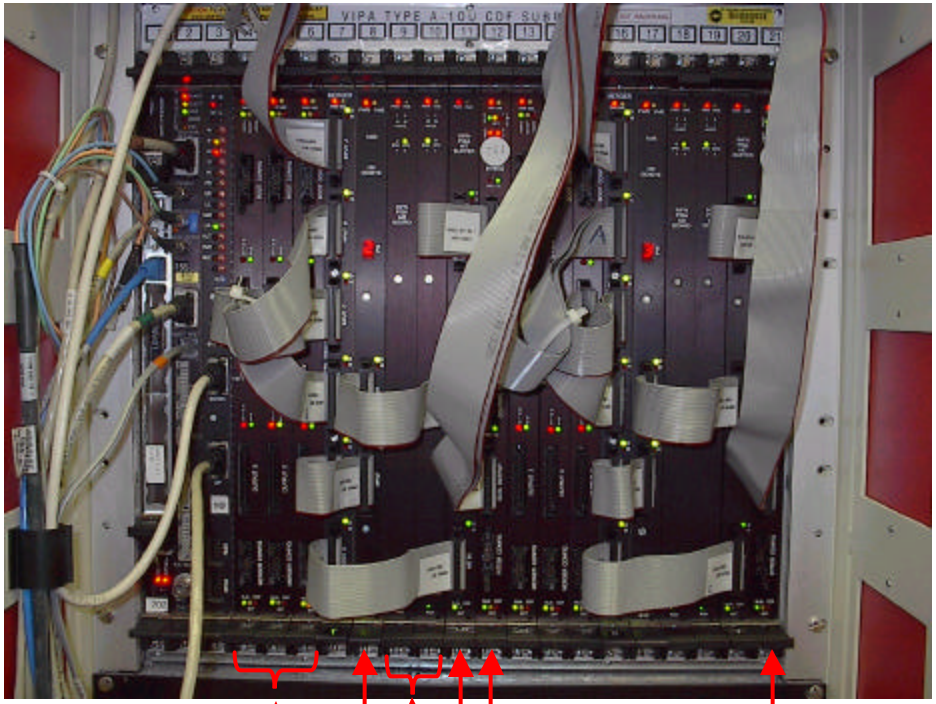

Regular “wedge” crate:

- All slots are full
- Only board which is easy to remove: TF
- At most one slot per wedge until (?) we replace AMS+HB

Boards layout as of now

b0svt07 (SVT backplane)/b0svt06 (std. P3 backplane)

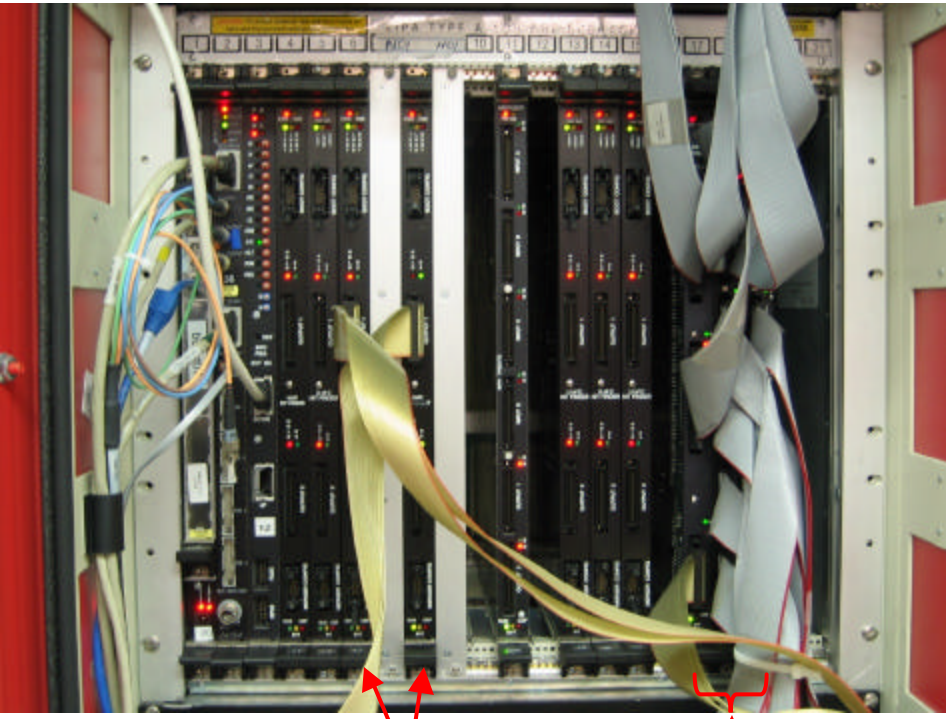

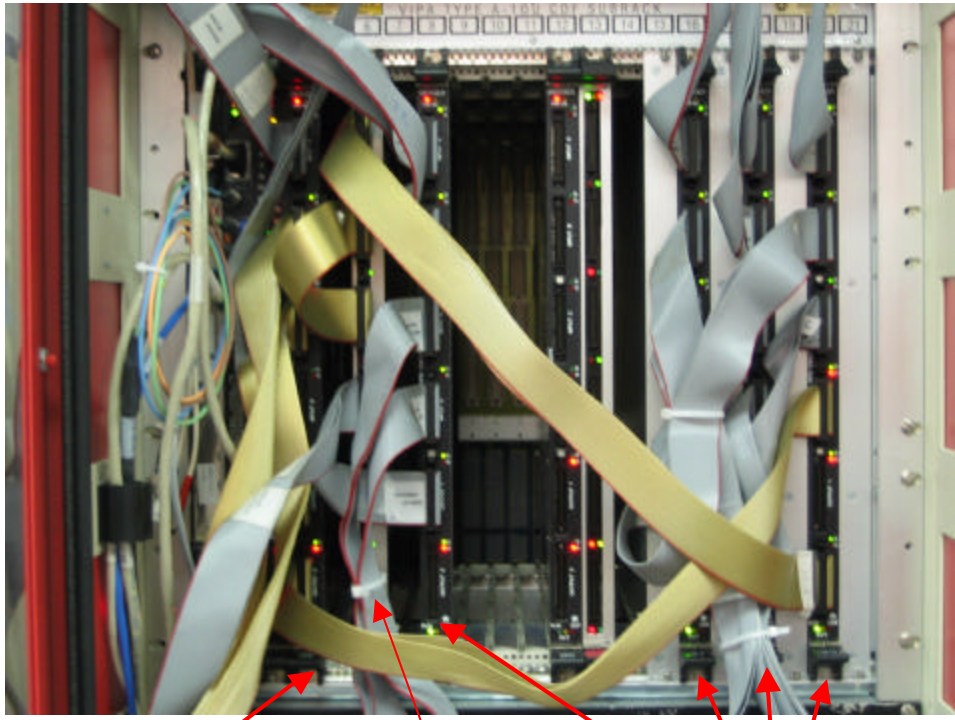

XTRPε (6,8)

XTF (17,18,19)

XTRPε + XTRP MERGER (4)

GB (6)

WEDGE MERGERS (8, 16,18,20)

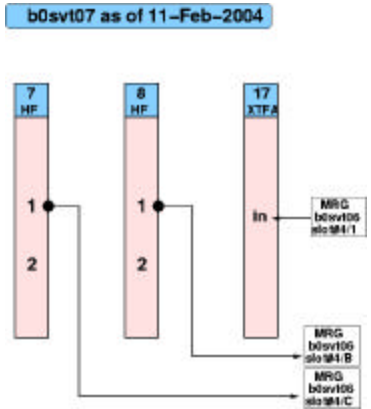

Used:

- Svt07: 5/18
- Svt06: 6/18

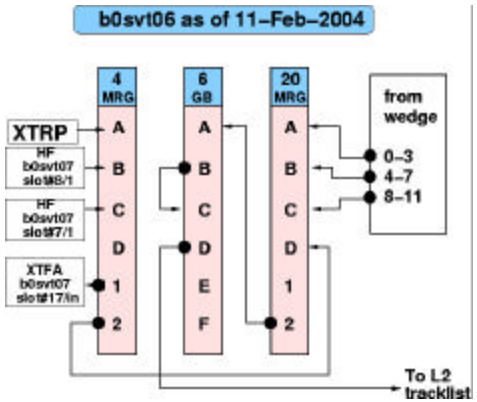

Re-arranging things:

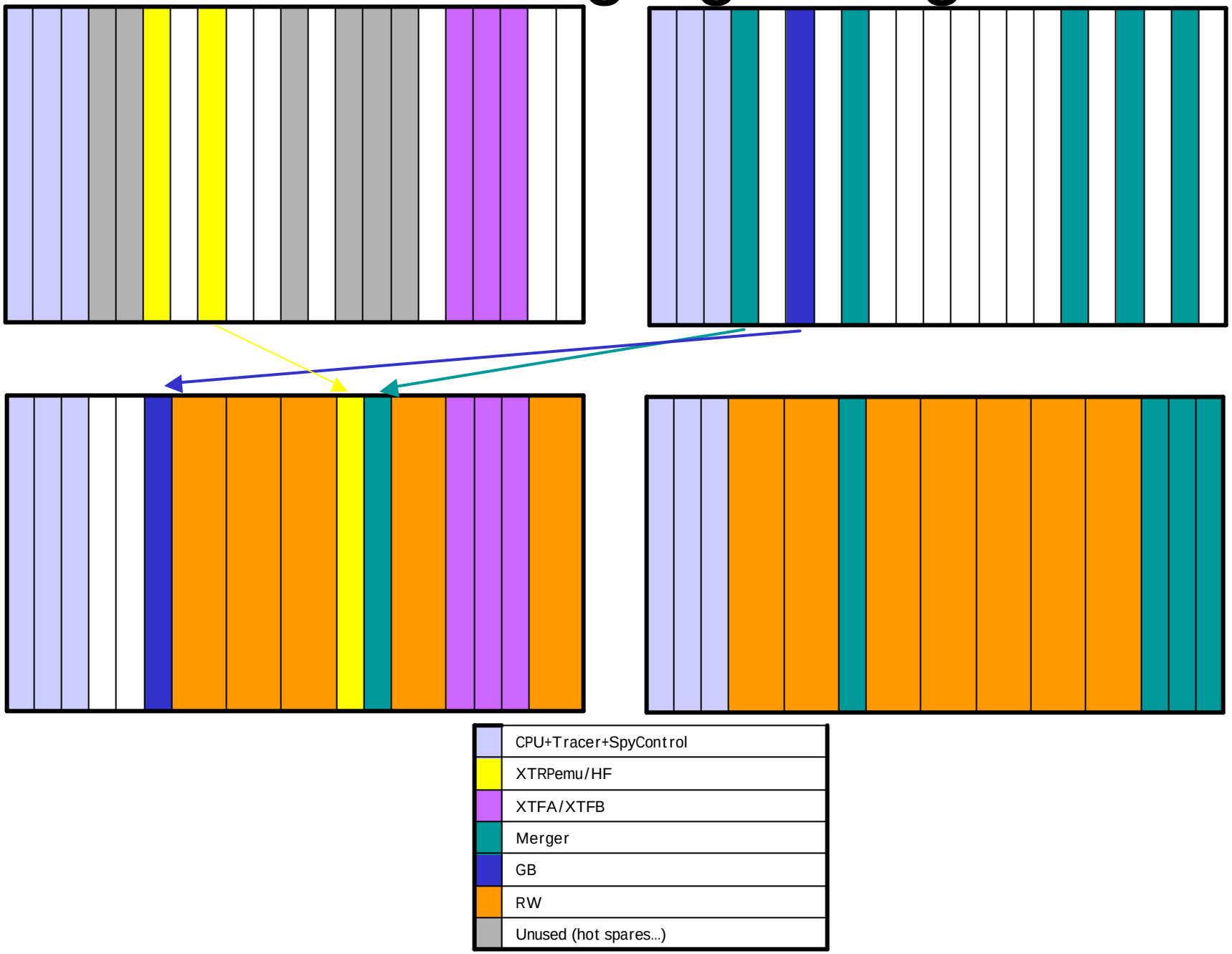
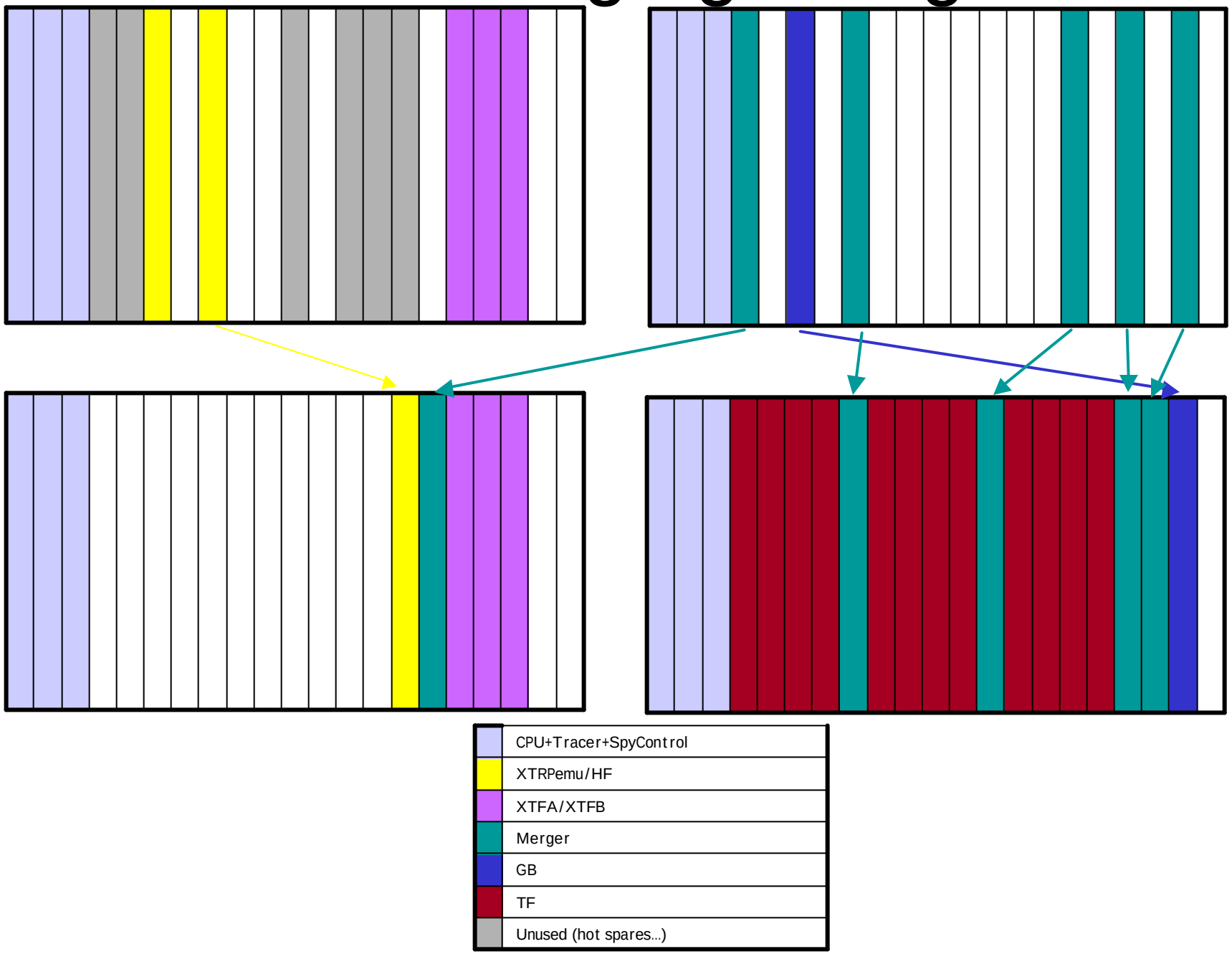
Re-arranging things: